e-Safe PRO™

PROACTIVE ▪ PROTECTIVE ▪ PROFESSIONAL



SIMPLE WARNING SCALE
HIGH-CAUTION-LOW

Indicates likelihood of any buried service presence incl.: Balanced HV, Pot ended, Direct Current and non-conductive types such as PVC MDPE, HDPE, and Fibre Optics

PROGRESSIVE 5 LANE DATA VIEW

Aids in identifying the most likely service routes through linear sites

ONE TOUCH + TRACKBACK DEPTH ESTIMATION

Provides spot depth estimation & ability to TRACKBACK across all visible data for optimised assessment of service route variations

4 LAYER CHRONOS MASKING

Highlights the likely presence of services which may be in close proximity to each other and vertically stacked at differing depths

3 DEPLOYMENT CHOICES

BASELINE



SYNCLINE



SWITCHBACK



KEY SAFETY FEATURES

- Auto System Test on power-up with Failure Lockout
- Built-in Service Record with Overdue Warning

utsielectronics.co.uk

e-safe PRO™ SPECIFICATION

DIMENSIONS

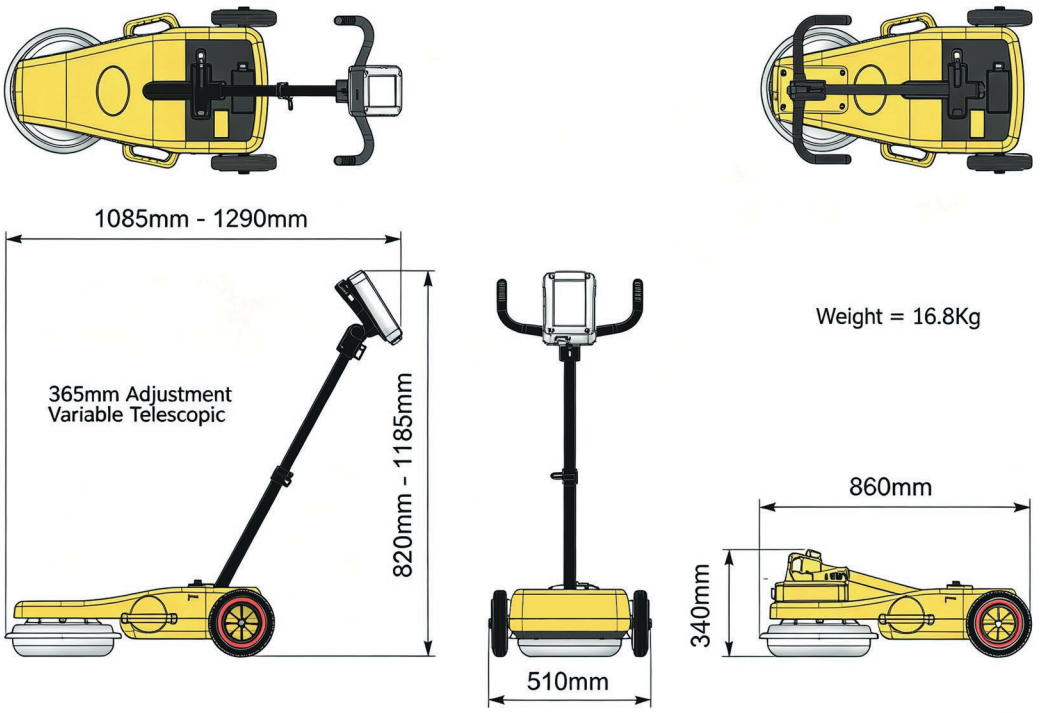

MAIN FEATURES

Data Collection Modes	3: Baseline, Syncline & Switchback
Displayed Data Type (Fully Automated Processing)	Progressive Transects - Most recent 5 visible
Chronos Masking (4 descending Levels + All)	0-24%; 25%-49%; 50%-74%; 75%-100% (% timebase)
Antenna Type & Frequency Range	Ground contact X-Polar 135MHz - 835MHz
Sensitivity (threshold) adjustment	16 operator adjustable increments (default 8)
Detection Range (Good conditions)	Up to 1.7m subject to soil and environmental change
Depth Estimation (with Safety Protocol)	Nearest 0.1 metres +/- 0.1 metres
Depth Estimation (with Safety Protocol overridden)	Nearest 0.1 metres +/- 0.3 - 0.5 metres
Depth Estimation (Trackback)	Reverse Common Point Progression (5,4,3,2,1)
Display Screen	High Contrast 177mm Portrait Sunlight readable LCD
Display Angle Adjustment	90 Degrees Operator adjustable tilt
Battery Type	Removable 14.4v Lithium-ion Rechargeable Pod
Battery Life	3-5 hrs Full charge (temperature dependant)
Battery Charging	External (110v-220v AC) charger 2-6 hrs
Ambient Operating Temperature Range	-10°C to +50°C

INTERNATIONAL HEAD OFFICE

Utsi Electronics Ltd
26 Glenmore Business Park, Ely Road,
Waterbeach, Cambridge CB25 9FX
enquiries@utsielectronics.co.uk
+44(0)1223 441521
www.utsielectronics.co.uk