LOG e-Safe™

Electronic service avoidance for everyone



SIMPLE WARNING SCALE
HIGH-CAUTION-LOW

Indicates likelihood of buried services including metallic and non-conductive utilities

ONE-TOUCH DEPTH ESTIMATION

Provides an immediate indicative depth at the selected target position

AUTO LOGGING WITH GPS

Records location, operating settings and depth information for later review

3 LEVEL CHRONOS MASKING

Helps separate responses from services positioned at different relative depths

OFF-ROAD MAX OPTION

Provides improved mobility and ground clearance over rough or uneven terrain

Detects MDPE, HDPE, PVC, fibre optic, asbestos, brick,clay, balanced Hv, pot ended and direct current cables

KEY SAFETY FEATURES

Auto System Test on power-up with Failure Lockout
Built-in Service Record with Overdue Warning

utsielectronics.co.uk

e-safe LOG™ SPECIFICATION

DIMENSIONS

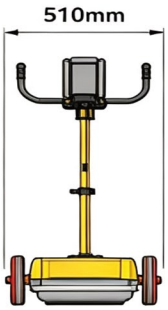

with XPM2 Antenna & 200 dia. Wheels

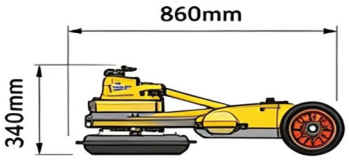

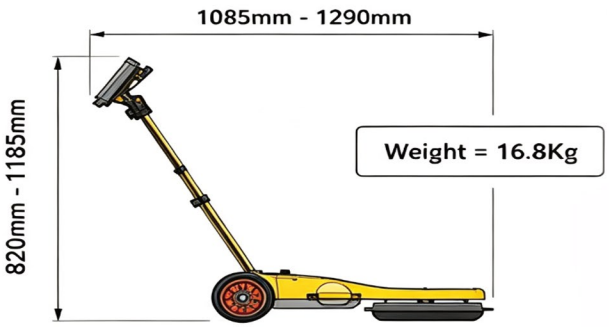

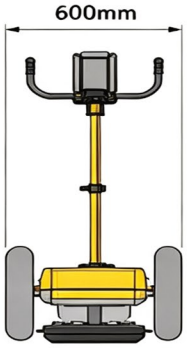

with optional 400mm dia. Max Wheel Kit and Antenna extender fitted

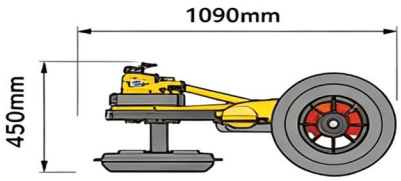

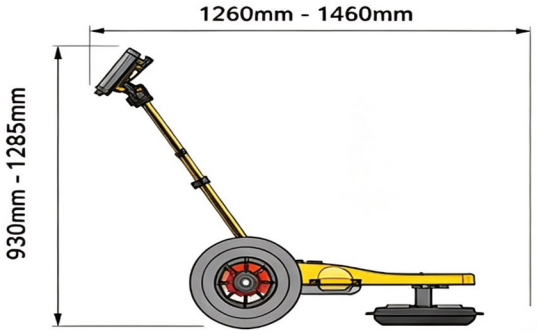

MAIN FEATURES

Antenna Type & Frequency	XPM2 - X-Polar Bi-static Dipole 135MHz-835MHz (nom. Cf 485MHz)
Sensitivity Threshold	16 Operator adjustable increments (default 8)
Chronos Masking Levels	4 Levels (% depth attained) 16%, 32%, 68%, 84%
Detection Range	Up to 1.7m depending on ground conditions.
Max Depth Estimation Accuracy	Nearest 0.1m +/- 0.1m (with sensitivity threshold set to default)
Display Screen	High Contrast 177mm Sunlight readable Portrait LCD
Operator Display Adjustment	Height 365mm Variable Telescopic. Angle: 90 Degrees of Tilt
Operating Temperature Range	-10°C to +50°C
Downloadable Log of Use	Records GPS coordinates of usage + Date, Time, Function, Setting, Depth
Built-in Safety functions	Power On Self Test with Failure Lockout & Service Due/Overdue Warning
Battery Type	Removable 14.4V Li-ion Pack 3.8Ah "Flight safe" Lithium-ion Battery Pod
Battery Charge/Use	3-6 hrs charging at room temp typically provides 2-4 hrs continuous use

INTERNATIONAL HEAD OFFICE

Utsi Electronics Ltd
26 Glenmore Business Park, Ely Road,
Waterbeach, Cambridge CB25 9FX
enquiries@utsielectronics.co.uk
+44(0)1223 441521
www.utsielectronics.co.uk